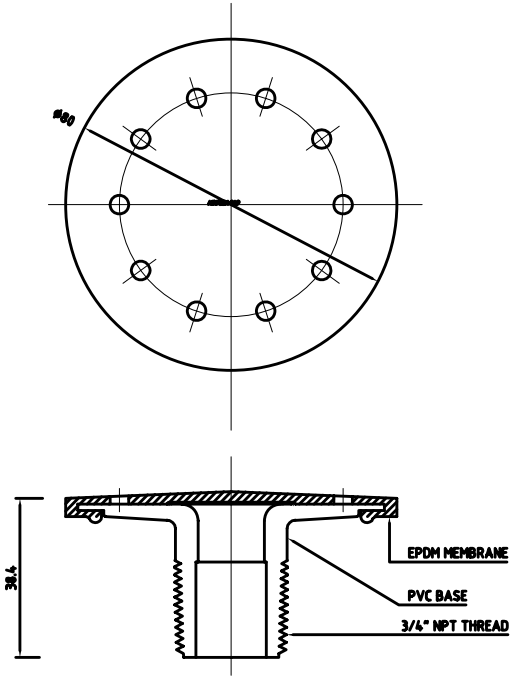

AIRFLEX-CAP ASSEMBLY

PART No.	PART NAME	MATERIAL	Q'TY	REMARKS

AIRFLEX CAP COARSE BUBBLE DIFFUSER

SCALE : NTS	DATE : 1/03/2005	REVISED :	DRAWN BY : S.I.KANG

SSI Stamford Scientific International, Inc.

DWG No.	AFC-3-P01
MODEL	AFC-80